Serial No. 6503

SIR No. 21031

T C No PO 001-201-05

Date Issued 8-9-85

Map Date L

MECKLENBURG COUNTY
DEPARTMENT OF ENVIRONMENTAL HEALTH

SOIL INVESTIGATION REPORT

REVISED REPORT DUE TO LOT RECONFIGURATION

NAME OF OWNER Martin Development Group

ADDRESS OF OWNER LAST 1800 One Tryon Center, FIRST Charlotte, NC MIDDLE ZIP 28284

LOCATION OF PROPERTY North Point Road

STREET OR COUNTY ROAD

SUBDIVISION Lookout Point LOT NO 41 BLOCK NO

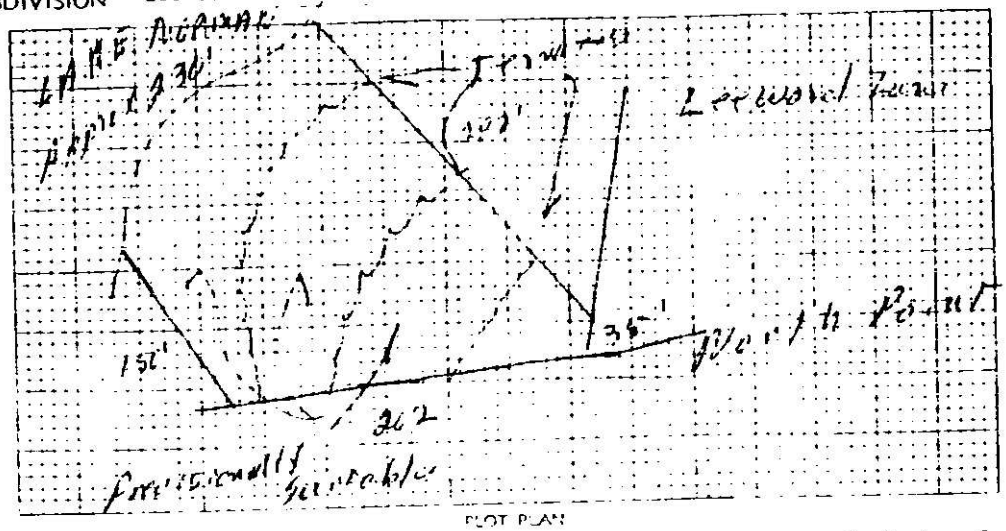

PLOT PLAN

This is [illegible] Mecklenburg County Department of [illegible] conducted on that [illegible] PROVISIONALLY SUITABLE [illegible] The said lot is approved [illegible] subsurface soil absorption [illegible] discharge [illegible] the Mecklenburg County Department [illegible] wastewater treatment [illegible]

1. [illegible]
2. [illegible] Mecklenburg [illegible]
3. [illegible]
4. [illegible]

This [illegible] regulations of the [illegible] Health Services and the Mecklenburg County Health Commission [illegible] at any time in the future [illegible] are changed such that this approval would not have been granted [illegible] regulations been in effect on the issue date.

Soil Scientist

Environmental Health Director or Authorized Section Head

EHD 5-76

15818 N. Point

PROPOSED PLOT PLAN

MECKLENBURG COUNTY ENVIRONMENTAL HEALTH

1200 BLYTHE BOULEVARD
CHARLOTTE, NC 28203
PHONE (704) 376-4603

FILE: 21031

TC: 001-201-05

Draw in and name all roads adjoining the property. Draw in and accurately dimension the lot concerned. Accurately indicate property boundaries, proposed and/or existing structures and driveways, underground utilities, and wells and springs within 100 feet of the proposed building or drainfield.

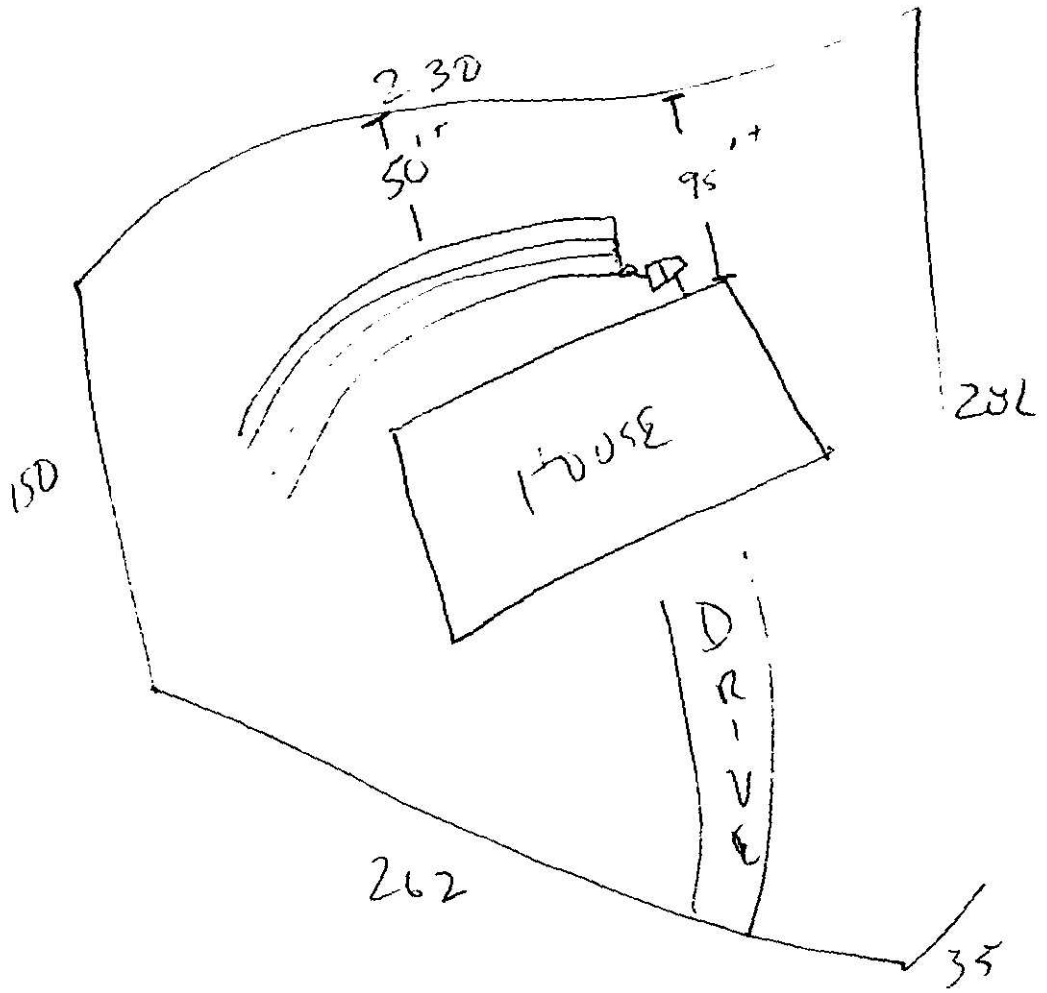

Signed: [signature]

Date: 3 25, 81

Date Received 5-17-84

SIR No. 21031

T. C. No. 001-201-05

Map Date 1978

MECKLENBURG COUNTY
DEPARTMENT OF ENVIRONMENTAL HEALTH

APPLICATION FOR SOIL INVESTIGATION

1) NAME OF OWNER (LAST) MARTIN DEVELOPMENT GROUP (FIRST)

2) ADDRESS OF OWNER 1800 ONE TRYON CENTER (MIDDLE) CHARLOTTE (ZIP) 28284

3) PHONE NO Home _____ Office 332-1242

4) LOCATION OF PROPERTY NORTH POINT RD (STREET OR COUNTY ROAD)

5) SUBDIVISION LOOKOUT POINT LOT NO 50 BLOCK NO _____

MAP BOOK NO 1 PAGE NO 20

6) DEED REFERENCE DEED BOOK N/A PAGE NO _____

Application is hereby made to the Mecklenburg County Department of Environmental Health for the conduct of a soil investigation and an on site inspection of the lot hereinabove described for the purpose of determining if the lot is suitable for the installation of an individual septic tank wastewater treatment system with subsurface soil absorption effluent discharge.

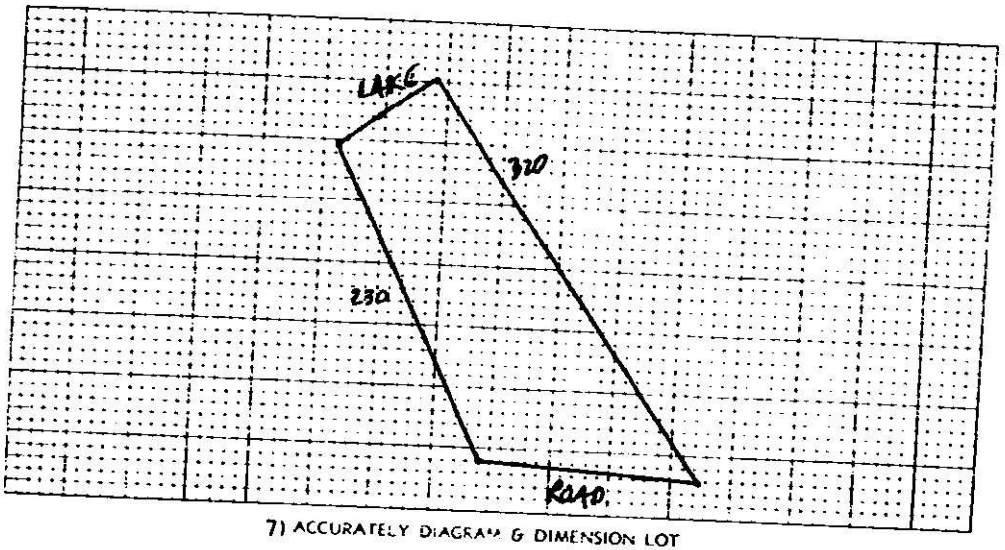

7) ACCURATELY DIAGRAM & DIMENSION LOT

OWNER _____

EHD-5-76

ENVIRONMENTAL HEALTH DEPARTMENT COPY

MECKLENBURG COUNTY
DEPARTMENT OF ENVIRONMENTAL HEALTH
1200 BLYTHE BOULEVARD
CHARLOTTE NORTH CAROLINA 28203

SIR. NO. [illegible]
T.C. NO. FO 001-201-[illegible]
DATE: August 24, 19[illegible]

Martin Development Group
1800 One Tryon Center
Charlotte, North Carolina 28284

RE: Property located at Off North Point Road, Lot 50

Dear Sir:

At your request, a field investigation was conducted on the property designated above. The soils on the property were found to contain a limited area of provisionally suitable soil for the installation of a ground absorption sewage disposal system. A copy of the site evaluation report is enclosed for your information.

Should you desire to file for permission to install a ground absorption sewage disposal system, please submit plot plans for the proposed construction, well, and ground absorption sewage disposal system to this office. They will be reviewed and if it is found that there is an adequate area of provisionally suitable soil to accommodate the proposed installation, an Improvements Permit will be issued by this office.

If I may be of assistance, please feel free to call.

Sincerely,

Bill D. Hardister, Jr.
Environmental Health Supervisor

BDH/kbg

Enclosure

DEPARTMENT OF
ENVIRONMENTAL HEALTH
MECKLENBURG COUNTY,
NORTH CAROLINA

SITE EVALUATION

S.I.R. NO. 21031

T.C. NO. [illegible]

(Ground Absorption Sewage Disposal)

OWNER: [illegible]
ADDRESS: [illegible]
Charlotte, N.C. [illegible]

PLAT NO: [illegible]
LOT SIZE: Approx 25 [illegible] 57

LOCATION OF SITE: [illegible]

FACTORS	AREA 1	AREA 2	AREA 3	AREA 4
1. SLOPE (%)	S PS [illegible] U	S PS U	S PS U	S PS U
2. SOIL TEXTURE (12-36 inches) Sandy, Loamy, Clayey (Note 2-1 Clay)	S PS Clay U	S PS U	S PS U	S PS U
3. SOIL STRUCTURE (12-36 inches)	S PS [illegible] U	S PS U	S PS U	S PS U
4. SOIL DEPTH (inches)	S PS [illegible] U	S PS U	S PS U	S PS U
5. RESTRICTIVE HORIZONS (Inches) (Impervious strata, Rock)	S PS [illegible] U	S PS U	S PS U	S PS U
6. SOIL DRAINAGE/GROUNDWATER (external and internal)	S PS [illegible] U	S PS U	S PS U	S PS U
7. OTHER (Specify)	S PS U	S PS U	S PS U	S PS U

8. SOIL GROUP 1:A

9. SITE CLASSIFICATION Provisionally [illegible]

10. SOIL SERIES [illegible]

S - Suitable PS - Provisionally Suitable U - Unsuitable

**See Diagram on Back (includes: soil areas, property lines, roads, streams, gullies, wet areas, fill areas, wells, water bodies, slopes)

Recommendations/Comments: Terraces present - recommend plans for house & system locations

Described by: William C. [illegible]
Title: Soil Scientist

Date: 8-23-84

14

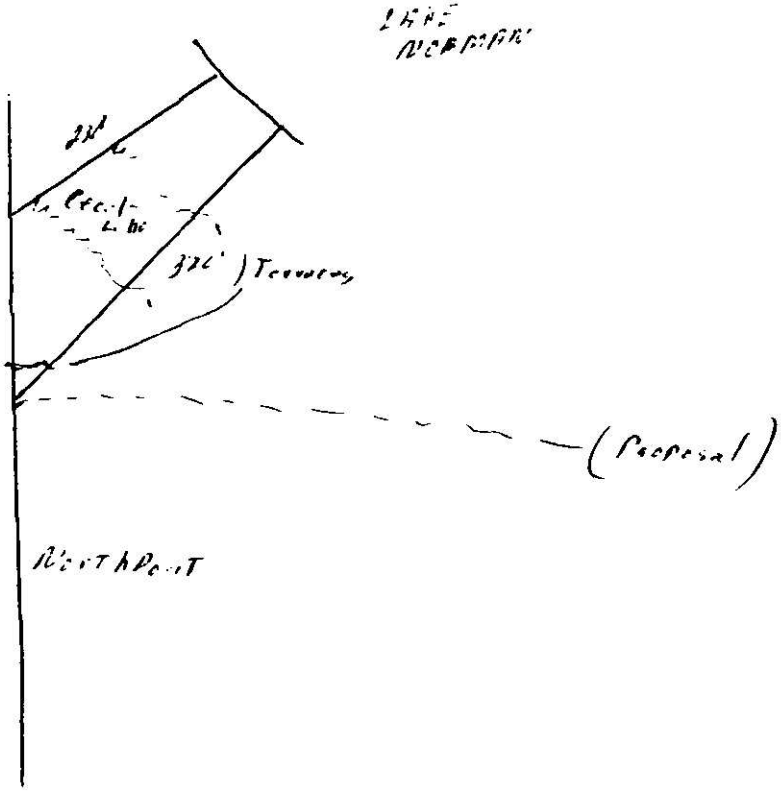

APPLICATION FOR AN IMPROVEMENT PERMIT

1200 BLYTHE BOULEVARD
CHARLOTTE, NC 28203
PHONE (704) 376-4603

OFFICE USE ONLY

FILE: Z1031

TC: PO 001-201-05

RECEIVED
MECKLENBURG COUNTY DEPARTMENT OF
Environmental Health

JOB LOCATION

① ADDRESS: 1515 (STREET NO) North Point (STREET) Rd. ② FILE: 21031

③ CITY: ____ ④ TAX PARCEL NO PO 001-201-05

⑤ SUBDIVISION: LOOKOUT PT. ⑥ LOT: 41 ⑦ BLOCK: ____

OWNER

⑧ NAME: Frank (FIRST) W. (MIDDLE) Hayes (LAST)

⑨ MAILING ADDRESS: 1800 Beacon Ridge Rd. Apt #328

⑩ CITY: ____ ⑪ STATE: ____ ⑫ ZIP: 28210

⑬ PHONE: (WORK) 532-5602 ⑭ (HOME) 3526840

REQUEST

This request is for a(n):

⑮ ☒ New installation permit ⑰ ☐ Authorization for mobile home exchange

⑯ ☐ Repair or alteration permit ⑱ ☐ Other (specify ____

DESIGN CRITERIA

System will serve:

⑲ ☒ Residence ⑳ ☐ Mobile home ㉑ ☐ Business or place of public assembly

㉒ Number of bedrooms? 3 ㉕ Type? ____

㉓ Maximum occupancy? 6 ㉖ Maximum number of employees? ____

㉔ Basement? ☐ yes ☒ no ㉗ Maximum number of seats? ____

WATER SUPPLY

㉘ Water supply from (present or proposed):

A ☐ Individual well

B ☐ Municipal system

C ☐ ~~Community well~~

D ☑ Community system

㉙ The undersigned, owner of the property described above as the "JOB LOCATION" has read the foregoing application, acknowledges that the contents of same are true and authorizes agents of the MECKLENBURG COUNTY DEPARTMENT OF ENVIRONMENTAL HEALTH to enter onto the property for the purpose of processing this request.

Signed: Frank W. Hayes

Date: 4/12/96

㉚ Accurately dimensioned plot

WHITE - ENVIRONMENTAL HEALTH DEPARTMENT'S COPY ● CANARY - ENVIRONMENTALIST'S COPY ● PINK - OWNER'S COPY

Serial No. 9465

SIR No. 21031

Date Issued 4/28/1986

T. C. No. 001-201-05 PO

Map Date L QKT

MECKLENBURG COUNTY
DEPARTMENT OF ENVIRONMENTAL HEALTH

TO THE BUILDING INSPECTION DEPARTMENT

APPROVAL OF LOT FOR INSTALLATION OF AN INDIVIDUAL SEPTIC TANK WITH SUBSURFACE, SOIL ABSORPTION, EFFLUENT DISCHARGE

NAME OF OWNER Hayes, Frank M.
(LAST, FIRST, MIDDLE)

ADDRESS OF OWNER 1800 Beacon Ridge Road, Apt. 328 ZIP 28210

LOCATION OF LOT 15818 North Point Road
(STREET OR COUNTY ROAD)

SUBDIVISION Lookout Point LOT NO. 41 BLOCK NO. _____

MAP BOOK NO. _____ PAGE NO. _____

The above specified lot is approved by the Mecklenburg County Department of Environmental Health for the installation of an individual septic tank system with subsurface, soil absorption, effluent discharge based on the soil investigation, on an on-site inspection of the said lot; and upon the information supplied in the "Application for an Installation, Construction, Alteration, and/or Repair Permit", number 21031 This approval is subject to the following terms and conditions:

1. That the nitrification field be installed, constructed, altered and/or repaired in the same area where the soil investigation was run.
2. That an "Installation, Construction, Alteration, and/or Repair Permit" be issued and in full force and effect when the system is installed, constructed, altered, and/or repaired and that the system be installed in accordance with same.

This approval may be revoked and the building inspection department requested to revoke any building permit (s) which have been issued to authorize construction on the said lot if at any time it is determined that any information contained in the "Application for an Installation, Construction, Alteration, and/or Repair Permit" is not correct or is untrue or that the septic-tank system is not being installed, constructed, altered and/or repaired in accordance with a valid Installation, Construction, Alteration, and/or Repair Permit.

Environmentalist

Environmental Health Director, or Authorized Section Head

EHD-5-76

INSTALLATION, CONSTRUCTION, ALTERATION, AND/OR REPAIR PERMIT

1200 BLYTHE BOULEVARD
CHARLOTTE, NC 28203
PHONE (704) 376-4603

FILE: 21031 DATE: 8-11-86
90 TC: 001-201-05 PL
SERIAL Nº 10272

Permission is hereby given to ✓ Install or Construct, ____ Alter or Repair the individual septic tank wastewater treatment system with subsurface, soil absorption, effluent discharge as specified herein at the described location. This permit is granted based upon the information supplied in the application dated 4-17-86 All work shall be completed on or before 9-11-86, after which date this permit shall be null and void The system shall meet all of the construction requirements of 10 NCAC 10A .1900 which are in effect on the date of the granting of this permit A Certificate of Completion or an Operation Permit must be obtained from the Mecklenburg County Department of Environmental Health before any system can be covered up or placed into service. The issuance of this permit does not in any way guarantee that the system anticipated to be constructed will operate properly or relieve any person now or hereafter owning, controlling or using such system from any liability resulting from the failure of the system to operate properly.

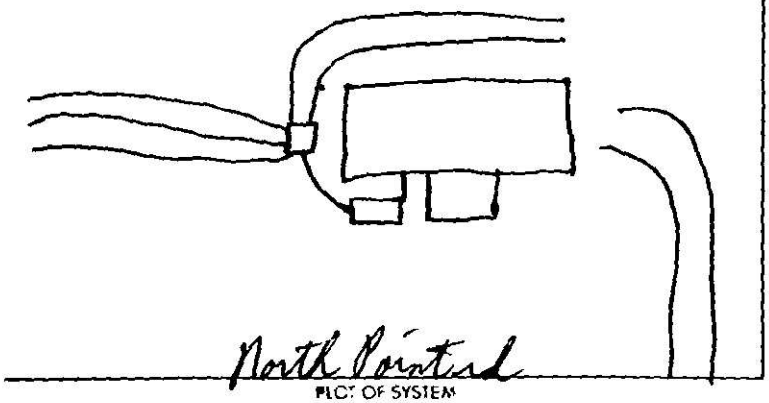

PLOT OF SYSTEM

Liquid Capacity of Septic Tank 1500 gallons
Liquid Capacity of Dosing Tank ____ gallons
Tank Construction Pcc
Absorption and or Nitrification Lines
Trench Width 3 feet
Total Line Length 400 feet
Number of Lines 5
Depth of Stone 12 inches
Distance from House 5 feet
Distance from Property Line 10 feet
Distance from Well Comm feet

NAME OF OWNER Frank Hayes
LOCATION OF PROPERTY 15818 North Point Rd.
Comments: 5 lines 3'X80'X12" stone

Division or Section Head

B. R. Ferguson
Environmentalist

If this permit is for the installation or construction of a new system, it must be signed by the division or a section head of the Department of Environmental Health in order to be valid. Only the signature of the Environmentalist is required where an existing system is being altered or repaired.

WHITE - ENVIRONMENTAL HEALTH DEPARTMENT'S COPY ● CANARY - ENVIRONMENTALIST'S COPY ● PINK OWNER OR AGENTS COPY

C of A (s) No 21031
PO
T C No 001-201-05
✓ CKT

Date Issued 8-29-86 **Serial** 8829

MECKLENBURG COUNTY
DEPARTMENT OF ENVIRONMENTAL HEALTH

CERTIFICATE OF APPROVAL

(Individual Septic Tank System with Subsurface, Soil Absorption, Effluent Discharge)

Name of Owner Hayes (LAST) Frank (FIRST) _____ (MIDDLE)

Location of Property 15818 North Point Rd.

Application Number — Permit Number —

Inspection Data:

Liquid Capacity of Tank 1500 Tank Material PCC

Total Length of Drain Tile 400' Number of Lines 5

Depth of Filter Material 12" Cover Depth 15"-21"

Water Supply Source Comm. Distance from Water Source —

Excavation Inspected 8-29-86 (DATE) Tank Inspected 8-29-86 (DATE)

Nitrification Field Inspected 8-29-86 (DATE)

Washing Machine Line Inspected If Applicable — (DATE)

The undersigned has inspected the Individual Septic Tank System with subsurface, soil absorption, effluent discharge as described above and it has been ✓ installed or constructed, altered or repaired in accordance with the permit issued and the regulations of the Mecklenburg County Health Commission in effect on the date of issuance of the permit. The issuance of this Certificate of Approval does not in any way guarantee that the system will operate properly or relieve any person now or hereafter owning, controlling or using such system from any liability resulting from the failure of the system to operate properly. This Certificate of Approval is issued subject to those restrictions and conditions shown on the permit(s) in addition to those listed below under comments. This Certificate of Approval shall be null and void if any information contained in the application is untrue or if any additions are made to the property which would increase the requirements for said system.

Comments 1986, 1500 ST, CON, 1200 SFT, 12 G, cecil

B. R. Ferguson
Environmentalist

EHD-5-76