PROPOSED PLOT PLAN

MECKLENBURG COUNTY · ENVIRONMENTAL HEALTH ·

1200 BLYTHE BOULEVARD
CHARLOTTE, NC 28203
PHONE (704) 376-4603

FILE: 21821

TC: _____

Draw in and name all roads adjoining the property. Draw in and accurately dimension the lot concerned. Accurately indicate property boundaries, proposed and/or existing structures and driveways, underground utilities, and wells and springs within 100 feet of the proposed building or drainfield.

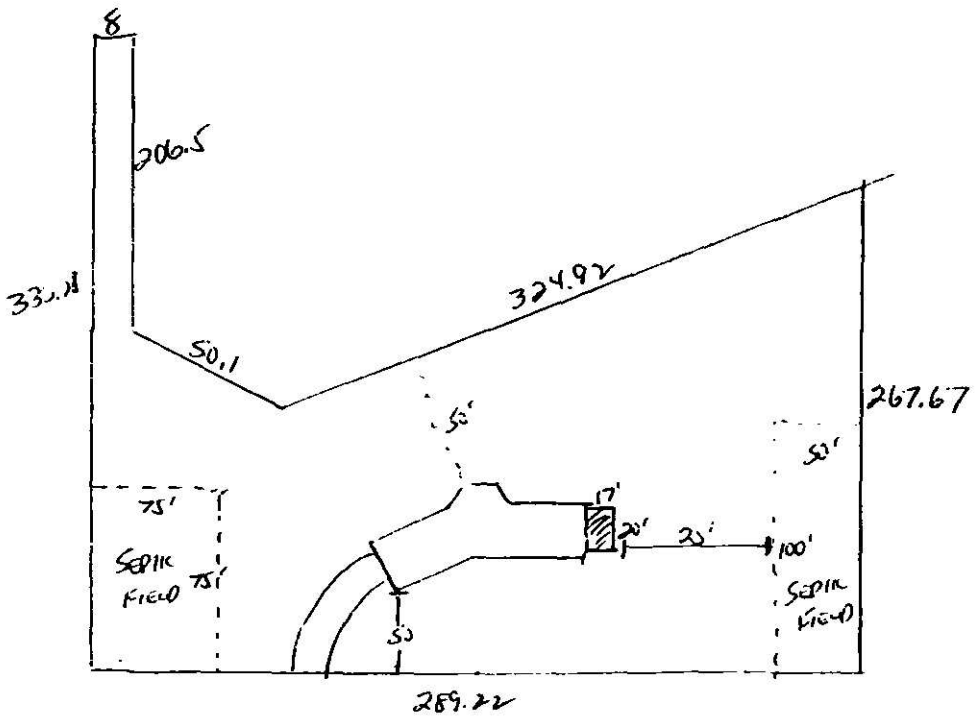

Signed: C Claire Comer

Date: 3-27-87

INSTALLATION, CONSTRUCTION, ALTERATION, AND/OR REPAIR PERMIT

1200 BLYTHE BOULEVARD
CHARLOTTE, NC 28203
PHONE (704) 376-4603

FILE: ~~21000~~ 21821 DATE: 9/9/86

TC: 001-061-09 10 PO ☐ L

SERIAL № 10294

Permission is hereby given to ✓ Install or Construct, _____ Alter or Repair the individual septic tank wastewater treatment system with subsurface, soil absorption, effluent discharge as specified herein at the described location. This permit is granted based upon the information supplied in the application dated 4/29/86. All work shall be completed on or before 10/9/86, after which date this permit shall be null and void. The system shall meet all of the construction requirements of 10 NCAC 10A .1900 which are in effect on the date of the granting of this permit. A Certificate of Completion or an Operation Permit must be obtained from the Mecklenburg County Department of Environmental Health before any system can be covered up or placed into service. The issuance of this permit does not in any way guarantee that the system anticipated to be constructed will operate properly, or relieve any person now or hereafter owning, controlling or using such system from any liability resulting from the failure of the system to operate properly.

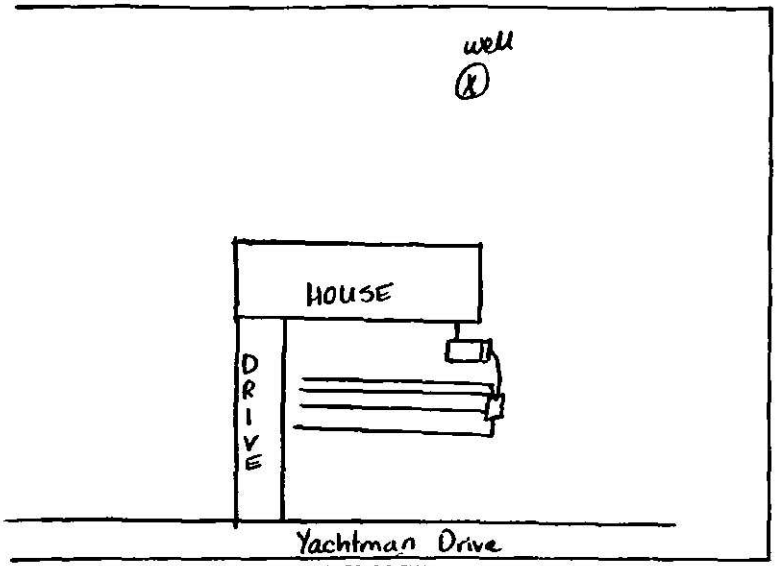

PLOT OF SYSTEM

Liquid Capacity of Septic Tank 1500 gallons

Liquid Capacity of Dosing Tank — gallons

Tank Construction PCC

Absorption and/or Nitrification Lines:

Trench Width 3 feet

Total Line Length 400 feet

Number of Lines ~~5x80~~ 4x100'

Depth of Stone 12 inches

Distance from House 5 feet

Distance from Property Line 10 feet

Distance from Well >100 feet

NAME OF OWNER Knox, Black and Briggs Construction Inc.

LOCATION OF PROPERTY ~~19400~~ 19407 Yachtman Drive

Comments: 4 ~~X~~ Trenches 3' ~~X80~~ 100' X12" stone with gradeboards, straw as cover

John R Atkinson
Division or Section Head

Cynthia G. Bass
Environmentalist

* If this permit is for the installation or construction of a new system, it must be signed by the division or a section head of the Department of Environmental Health in order to be valid. Only the signature of the Environmentalist is required where an existing system is being altered or repaired.

WHITE - ENVIRONMENTAL HEALTH DEPARTMENT'S COPY ● CANARY - ENVIRONMENTALIST'S COPY ● PINK - OWNER OR AGENTS COPY

Date Issued 5/14/1986

Serial No. 9484

SIR No. 21821

T. C. No. 001-061-09,10 PO

Map Date 4 ORT

MECKLENBURG COUNTY
DEPARTMENT OF ENVIRONMENTAL HEALTH

TO THE BUILDING INSPECTION DEPARTMENT

APPROVAL OF LOT FOR INSTALLATION OF AN INDIVIDUAL SEPTIC TANK WITH SUBSURFACE, SOIL ABSORPTION, EFFLUENT DISCHARGE

NAME OF OWNER Knox, Black and Briggs Construction, Inc.
(LAST / FIRST / MIDDLE)

ADDRESS OF OWNER Rt. 7, Box 248, Mooresville ZIP 28115

LOCATION OF LOT 19407 Yachtman Drive
(STREET OR COUNTY ROAD)

SUBDIVISION Yachtman Shores LOT NO. 19 BLOCK NO.

MAP BOOK NO. PAGE NO.

The above specified lot is approved by the Mecklenburg County Department of Environmental Health for the installation of an individual septic tank system with subsurface, soil absorption, effluent discharge based on the soil investigation, on an on-site inspection of the said lot; and upon the information supplied in the "Application for an Installation, Construction, Alteration, and/or Repair Permit", number 21821. This approval is subject to the following terms and conditions:

1. That the nitrification field be installed, constructed, altered and/or repaired in the same area where the soil investigation was run.
2. That an "Installation, Construction, Alteration, and/or Repair Permit" be issued and in full force and effect when the system is installed, constructed, altered, and/or repaired and that the system be installed in accordance with same.

This approval may be revoked and the building inspection department requested to revoke any building permit(s) which have been issued to authorize construction on the said lot if at any time it is determined that any information contained in the "Application for an Installation, Construction, Alteration, and/or Repair Permit" is not correct or is untrue or that the septic-tank system is not being installed, constructed, altered and/or repaired in accordance with a valid Installation, Construction, Alteration, and/or Repair Permit.

Kelly Randall
Environmentalist

Environmental Health Director, or Authorized Section Head

EHB-5-76

Environmental Health Department's Copy

APPLICATION FOR AN IMPROVEMENT PERMIT

MECKLENBURG COUNTY DEPARTMENT OF ENVIRONMENTAL HEALTH
1200 BLYTHE BOULEVARD
CHARLOTTE, NC 28203
PHONE (704) 376-4603

RECEIVED
MAY 6 1986
ENVIRONMENTAL HEALTH

MECK COUNTY DEPARTMENT OF
RECEIVED
APR 30 1986
ENVIRONMENTAL HEALTH

(OFFICE USE ONLY)
FILE: 21821
TC: 001-061-09,10 PD

JOB LOCATION

① ADDRESS: 19407 (STREET NO) YACHTMAN DRIVE (STREET) (OFF-NANTZ RD) ② SIR FILE: 21821
③ CITY: DAVIDSON TOWNSHIP ④ TAX PARCEL NO.:
⑤ SUBDIVISION: YACHTMAN SHORES ⑥ LOT: 19 ⑦ BLOCK:

OWNER

⑧ NAME: KNOX, BLACK AND BRIGGS CONSTRUCTION, INC. (FIRST) (MIDDLE) (LAST)
⑨ MAILING ADDRESS: ROUTE 7, BOX 248
⑩ CITY: MOORESVILLE ⑪ STATE: NC. ⑫ ZIP: 28115
⑬ PHONE: (WORK) 704-664-2902 ⑭ (HOME) SAME

REQUEST

This request is for a(n):

⑮ ☒ New installation permit
⑯ ☐ Repair or alteration permit
⑰ ☐ Authorization for mobile home exchange
⑱ ☐ Other (specify)

DESIGN CRITERIA

System will serve:

⑲ ☒ Residence ⑳ ☐ Mobile home
㉑ ☐ Business or place of public assembly
㉒ Number of bedrooms? 3
㉕ Type?
㉓ Maximum occupancy? 4 (1783 SQ FT.)
㉖ Maximum number of employees?
㉔ Basement? ☐ yes ☒ no
㉗ Maximum number of seats?

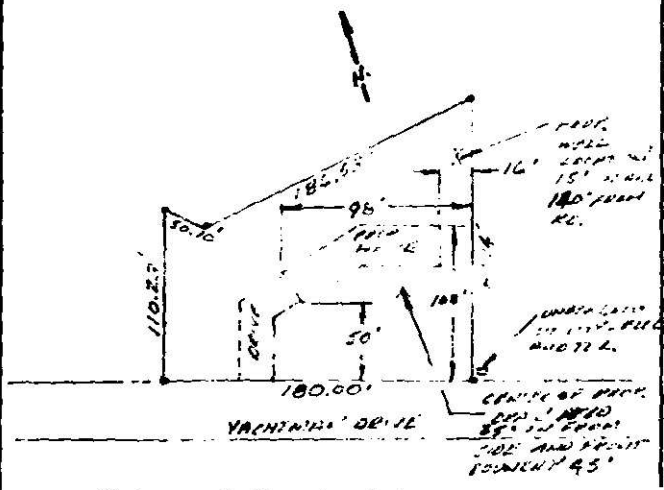

WATER SUPPLY

㉙ Water supply from (present or proposed)
A ☒ Individual well
B ☐ Municipal system
C ☐ Community well
D ☐ Community system

㉚ The undersigned, owner of the property described above as the "JOB LOCATION" has read the foregoing application, acknowledges that the contents of same are true, and authorizes agents of the MECKLENBURG COUNTY DEPARTMENT OF ENVIRONMENTAL HEALTH to enter onto the property for the purpose of processing this request.

Signed: (AGS)
Date: APRIL 29, 1986

㉘ Accurately dimensioned plot

WHITE - ENVIRONMENTAL HEALTH DEPARTMENT'S COPY ● CANARY - ENVIRONMENTALIST'S COPY ● PINK - OWNER'S COPY

PROPOSED PLOT PLAN

MECKLENBURG COUNTY · ENVIRONMENTAL HEALTH ·

1200 BLYTHE BOULEVARD
CHARLOTTE, NC 28203
PHONE (704) 376-4603

FILE: 21821

P.O. TC: 101-061-09-10

Draw in and name all roads adjoining the property. Draw in and accurately dimension the lot concerned. Accurately indicate property boundaries, proposed and/or existing structures and driveways, underground utilities, and wells and springs within 100 feet of the proposed building or drainfield.

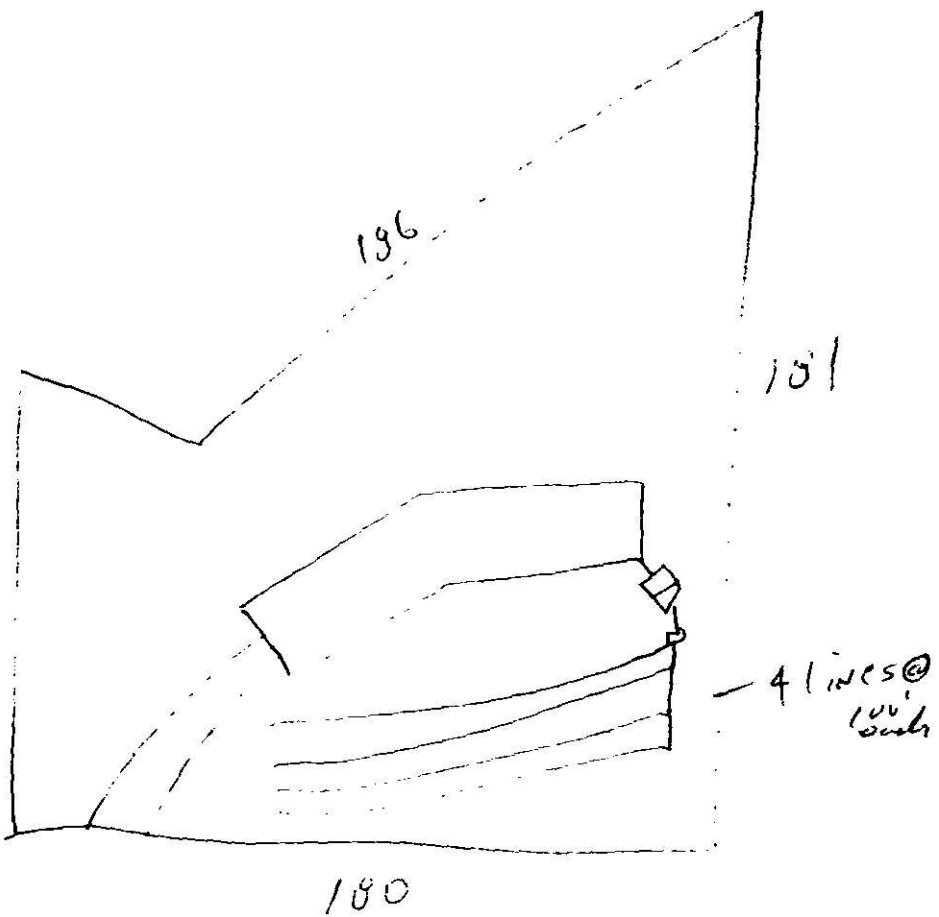

Signed: _____

Date: _____

* '86 05 09 10:45

21821

DATE 5/9/86

TO: CHARLOTTE-MECKLENBURG BUILDING STANDARDS
DEPARTMENT PERMIT ISSUING SECTION

FROM: COUNTY ENGINEERING DEPARTMENT

JURISDICTION Meck

001-061-09,10 p/o
PARCEL NUMBER

19407 Yachtman Dr
ASSIGNED STREET ADDRESS (ADDRESS OF RECORD)

EXISTING STREET [illegible] (IF DIFFERENT FROM ASSIGNED)

Yachtman Shores
PROJECT NAME (IF APPLICABLE)

THE ABOVE DESCRIBED LOCATION HAS BEEN [illegible] CONCERNING:

	APPROVED	NOT APPROVED
1. SUBDIVISION REGULATIONS	✓	
2. FLOODWAY REGULATIONS	✓	
3. EROSION CONTROL REGULATIONS	✓	
4. COMMERCIAL DRAINAGE PLAN	✓	
	PRESENT	NOT PRESENT
5. PUBLIC UTILITY EASEMENT	YES	NO ✓
6. PROPERTY [illegible]	YES	NO ✓
7. DRIVEWAY PERMIT REQUIRED		✓

REMARKS: _____

NOTE: THIS FORM [illegible] PAY [illegible] PERMIT FEE.
CERTIFICATE [illegible] TRANSPORTATION
DIVISION [illegible]

04-05-86
ALL OTHER [illegible]

SIGNED: [signature]

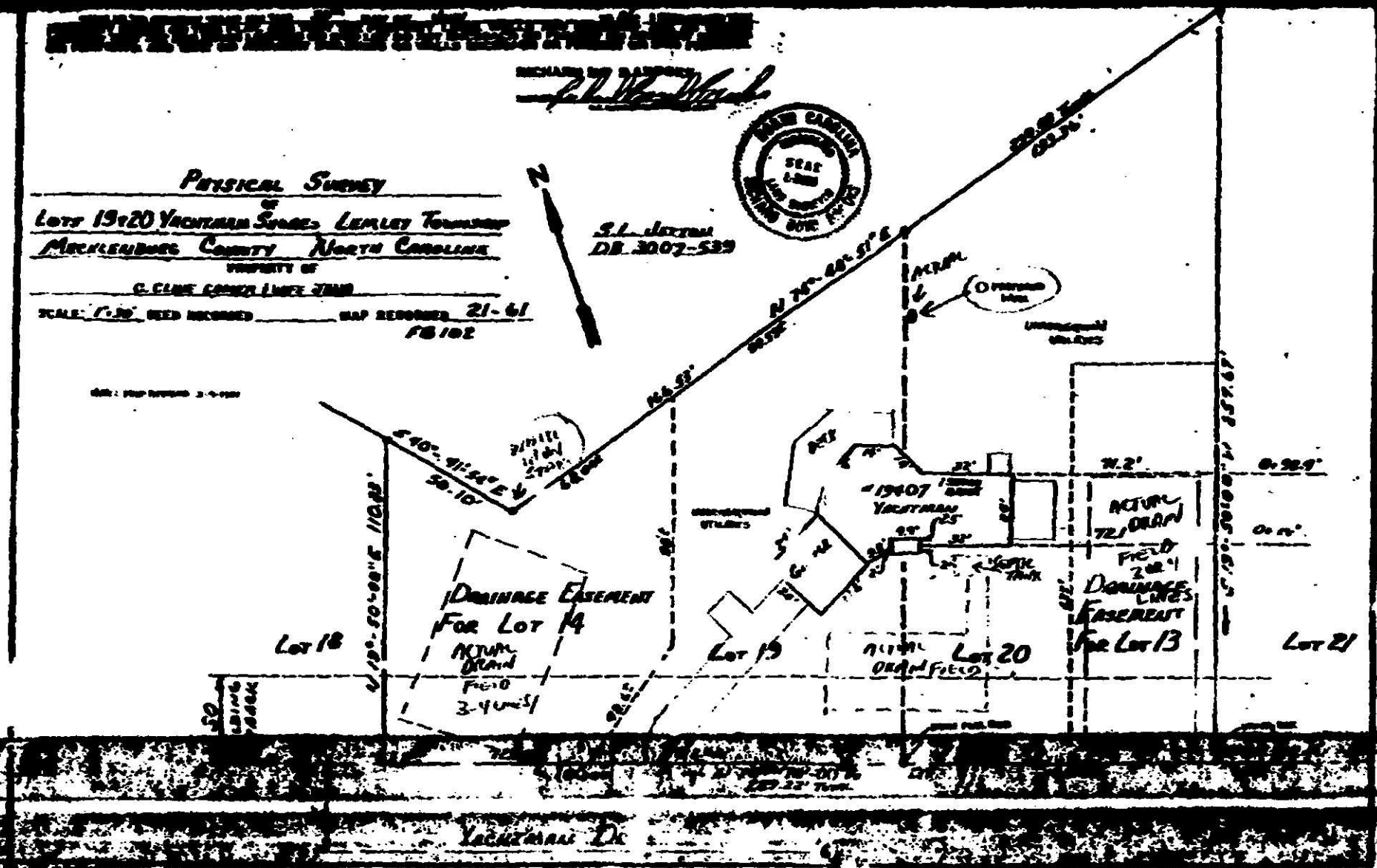
PHYSICAL SURVEY
OF
LOTS 19 & 20 YACHTMAN SHORES LEMLEY TOWNSHIP
MECKLENBURG COUNTY NORTH CAROLINA
PROPERTY OF
C. CLINE CORNER LAKE ZONE
SCALE: 1"=30' DEED RECORDED _____ MAP RECORDED 21-61
FB 102
N
S.L. JETTON
DB 3007-539
ACTUAL
#19407
YACHTMAN
DRAINAGE EASEMENT
FOR LOT 14
ACTUAL DRAIN FIELD
3-4 LINES
ACTUAL DRAIN FIELD
DRAINAGE LINES
EASEMENT
FOR LOT 13
LOT 18
LOT 19
LOT 20
LOT 21
YACHTMAN DR

CERTIFICATE OF COMPLETION/OPERATION PERMIT

MECKLENBURG COUNTY · ENVIRONMENTAL HEALTH

1200 BLYTHE BOULEVARD
CHARLOTTE, NC 28203
PHONE (704) 376-4803

FILE: 21821 DATE: 5-15-87

TC: 001-061-42, 43 ☑ L ☐ CRT

SERIAL № 10212

Name of Owner E. Comer Juris.:

Address of Property 19407 Yachtsman Dr.

Inspection Data:

Tank Material add/bath tank

Total Length of Drainfield 50

Number of Lines 2 @ 25'

Cover Depth 12"

Water Supply Source well

Distance to Water Source > 50'

Excavation Inspected 5-15-87

Tank(s) Inspected —

Wash Line Inspected

High Water Alarm Inspected

PLOT

Design: CTR# 127

The undersigned has inspected the Septic Tank System described above, and certifies it has been

☑ installed or constructed ☐ altered or repaired

☑ in accordance with the permit issued ☐ as detailed in the plot above

and meets the provisions of 10 NCAC 10A .1900, "Laws And Rules For Sanitary Sewage Collection, Treatment, And Disposal" in effect on the date of issuance of the permit. The issuance of this

☑ Certificate of Completion ☐ Operation Permit

does not in any way guarantee that the system will operate properly or relieve any person now or hereafter owning, controlling, or using such system from any liability resulting from the failure of the system to operate properly. This document is issued subject to those restrictions and conditions shown on the permit(s) and the provisions of 10 NCAC 10A .1900 in addition to those listed below under "COMMENTS." This document shall be null and void if any information contained in the application is untrue or if any additions are made to the property which would increase the requirements for said system.

COMMENTS:

B.R. Ferguson
Environmentalist

Mecklenburg County services are available without regard to ethnic origin, sex, or disability.

APPLICATION FOR AN IMPROVEMENT PERMIT

MECKLENBURG COUNTY ENVIRONMENTAL HEALTH

1200 BLYTHE BOULEVARD
CHARLOTTE, NC 28203
PHONE (704) 376-4603

Mecklenburg County services are available without regard to ethnic origin, sex, or disability.

MECK COUNTY DEPARTMENT
RECEIVED
MAR 26 1987
ENVIRONMENTAL HEALTH

(OFFICE USE ONLY)

FILE: 21821

TC:

SERIAL: № 12946

☑ L ☐ CRT

JOB LOCATION

① ADDRESS: 19407 YACHTMAN DRIVE (STREET NO / STREET) ② FILE:

③ JURISDICTION: ④ TAX PARCEL NO.: 001-061-42,43

⑤ SUBDIVISION: ⑥ LOT: ⑦ BLOCK:

OWNER

⑧ NAME: C. (FIRST) CLINE (MIDDLE) COMER (LAST)

⑨ MAILING ADDRESS: 19407 YACHTMAN DRIVE

⑩ CITY: HUNTERSVILLE ⑪ STATE: NC ⑫ ZIP: 28078

⑬ PHONE: (WORK) 377-1678 ⑭ (HOME) 892-3825

REQUEST

This request is for a(n):

⑮ ☐ New permit ⑰ ☐ Authorization for mobile home exchange

⑯ ☐ Repair or alteration permit ⑱ ☒ Other (specify) ADDITION TO BEDROOM + INSTALL TUB IN MASTER BATH

DESIGN CRITERIA

System will serve:

⑲ ☒ Residence ⑳ ☐ Mobile home ㉑ ☐ Business or place of public assembly

㉒ Number of bedrooms? 3 ㉕ Type?

㉓ Maximum occupancy? 4 ㉖ Maximum number of employees?

㉔ Basement? ☐ yes ☒ no ㉗ Maximum number of seats?

WATER SUPPLY

㉘ Water supply from (present or proposed):

A ☒ Individual well

B ☐ Municipal system

C ☐ Community well

D ☐ Community system

㉙ The undersigned, owner of the property described above as the "JOB LOCATION" has read the foregoing application, acknowledges that the contents of same are true, and authorizes agents of the MECKLENBURG COUNTY DEPARTMENT OF ENVIRONMENTAL HEALTH to enter onto the property for the purpose of processing this request.

Signed: C. Cline Comer

Date: 3/21/87

IMPROVEMENT PERMIT

The undersigned, an authorized agent of the MECKLENBURG COUNTY DEPARTMENT OF ENVIRONMENTAL HEALTH, certifies that the Department has approved the Request for the Job Location contained in this document. This approval is granted in accordance with the provisions of Laws And Rules For Sanitary Sewage Collection, Treatment And Disposal in effect at the time of issuance of the permit and is subject to the following provisions:

No work shall be conducted on the septic tank system until an installation, Construction, Alteration and/or Repair permit is issued by this Department.

This permit is not transferable, and shall become null and void 36 months from the date of issuance. 50 ft. was added for bath tub.

B.R. Ferguson 5-15-87
Environmental Sr. Date

S. Daniel 5-18-87
Director or Authorized Section Head Date

*This permit must be signed by the Director of Environmental Health or an authorized section head in order to be valid.

INSTALLATION, CONSTRUCTION, ALTERATION, AND/OR REPAIR PERMIT

MECKLENBURG COUNTY ENVIRONMENTAL HEALTH
1200 BLYTHE BOULEVARD
CHARLOTTE, NC 28203
PHONE (704) 376-4603

FILE: 21821 DATE: 5-5-87

TC: 001-061-42,43 ☑ L

SERIAL № 10842

Permission is hereby given to _____ Install or Construct, ✓ Alter or Repair the individual septic tank wastewater treatment system with subsurface, soil absorption, effluent discharge as specified herein at the described location. This permit is granted based upon the information supplied in the application dated 3-27-87. All work shall be completed on or before 6-5-87, after which date this permit shall be null and void. The system shall meet all of the construction requirements of 10 NCAC 10A .1900 which are in effect on the date of the granting of this permit. A Certificate of Completion or an Operation Permit must be obtained from the Mecklenburg County Department of Environmental Health before any system can be covered up or placed into service. The issuance of this permit does not in any way guarantee that the system anticipated to be constructed will operate properly, or relieve any person now or hereafter owning, controlling or using such system from any liability resulting from the failure of the system to operate properly.

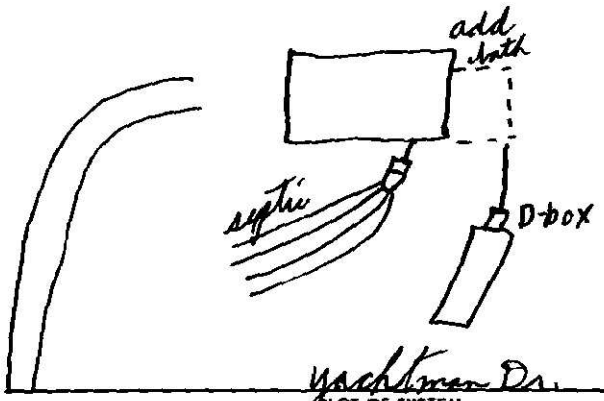

PLOT OF SYSTEM

Liquid Capacity of Septic Tank _____ gallons

Liquid Capacity of Dosing Tank _____ gallons

Tank Construction _____

Absorption and/or Nitrification Lines:

Trench Width 6 feet

Total Line Length 50 feet

Number of Lines 2

Depth of Stone 17 inches

Distance from House 5 feet

Distance from Property Line 10 feet

Distance from Well > 50 feet

NAME OF OWNER C. Comer

LOCATION OF PROPERTY 19407 Yachtman Dr.

Comments: 1 bed 6'X25'X17" stone for bath tub only.

Division or Section Head

B.R. Ferguson
Environmentalist

* If this permit is for the installation or construction of a new system, it must be signed by the division or a section head of the Department of Environmental Health in order to be valid. Only the signature of the Environmentalist is required where an existing system is being altered or repaired.

WHITE - ENVIRONMENTAL HEALTH DEPARTMENT'S COPY ● CANARY - ENVIRONMENTALIST'S COPY ● PINK - OWNER OR AGENTS COPY

C of A (s) No. 21821

Date Issued 9-12-86 Serial 8882 T. C. No. PO 001-061-09,10 CKT

MECKLENBURG COUNTY
DEPARTMENT OF ENVIRONMENTAL HEALTH

CERTIFICATE OF APPROVAL

(Individual Septic Tank System with Subsurface, Soil Absorption, Effluent Discharge)

Name of Owner Knox, Black & Briggs Const. Co. (LAST, FIRST, MIDDLE)

Location of Property 19407 Yacht Club Dr.

Application Number — Permit Number —

Inspection Data:

Liquid Capacity of Tank 1500 Tank Material PCC

Total Length of Drain Tile 400' Number of Lines 4

Depth of Filter Material 12" Cover Depth 12" - 42"

Water Supply Source well Distance from Water Source 100'

Excavation Inspected 9-12-86 (DATE) Tank Inspected 9-12-86 (DATE)

Nitrification Field Inspected 9-12-86 (DATE)

Washing Machine Line Inspected If Applicable — (DATE)

The undersigned has inspected the Individual Septic Tank System with subsurface, soil absorption, effluent discharge as described above and it has been ✓ installed or constructed, altered or repaired in accordance with the permit issued and the regulations of the Mecklenburg County Health Commission in effect on the date of issuance of the permit. The issuance of this Certificate of Approval does not in any way guarantee that the system will operate properly or relieve any person now or hereafter owning, controlling, or using such system from any liability resulting from the failure of the system to operate properly. This Certificate of Approval is issued subject to those restrictions and conditions shown on the permit(s) in addition to those listed below under comments. This Certificate of Approval shall be null and void if any information contained in the application is untrue or if any additions are made to the property which would increase the requirements for said system.

Comments: 1986, 1500 ST, CON, 1200 SFT, 12 G, Cecil

Installed as permitted

B. R. Ferguson
Environmentalist

EHD-5-76

Environmental Health Department Copy

Serial No. 6078

SIR No. 21821

Date Issued 2-14-85

T. C. No. PO 001-061-09,10,11, 15

Map Date L

MECKLENBURG COUNTY
DEPARTMENT OF ENVIRONMENTAL HEALTH
SOIL INVESTIGATION REPORT

NAME OF OWNER Knox, Russell B.
Knox, Bobby B.
LAST FIRST MIDDLE

ADDRESS OF OWNER P.O. Box 4, Davidson, NC ZIP 28036

LOCATION OF PROPERTY Nantz Road
STREET OR COUNTY ROAD

SUBDIVISION LOT NO 19 BLOCK NO.

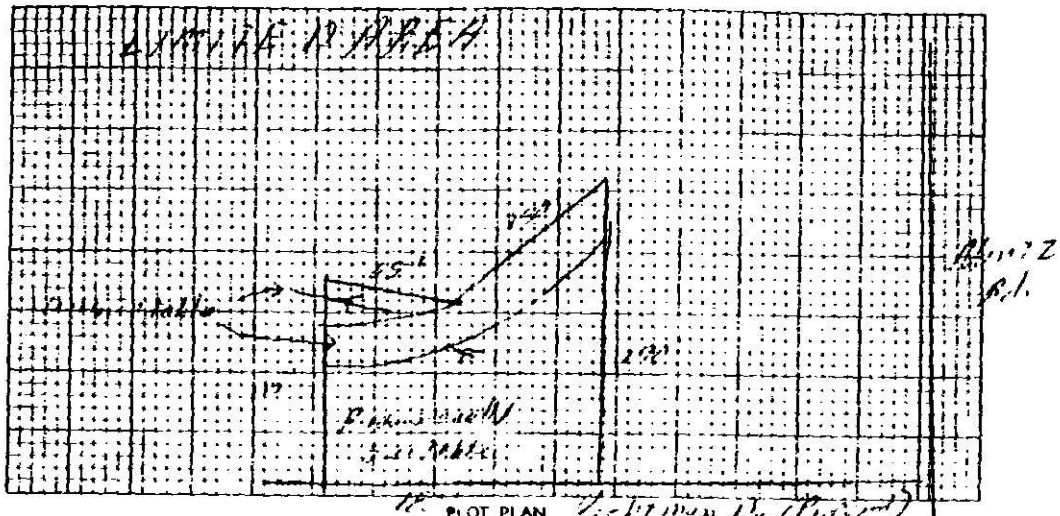

PLOT PLAN

This is to certify that a soil investigation and on-site investigation was made by the Mecklenburg County Department of Environmental Health on the lot described above. The said investigation was conducted on that portion of the lot as indicated on the above plot. PROVISIONALLY SUITABLE

The permeability rate determined by the investigation was [illegible] The said lot is approved for the installation of an individual septic tank wastewater treatment system with subsurface, soil absorption effluent discharge subject to the following terms and conditions:

1. A permit to install [illegible] the Mecklenburg County Department of Environmental Health [illegible] the wastewater treatment system on the said lot.
2. The size of the septic tank [illegible] determined by the Mecklenburg County Department [illegible] obtained above and on the size and type of building [illegible]
3. This approval is valid only [illegible] acceptable for system installation on the above plot.
4. This approval is [illegible] performed on the lot which in the opinion of the Mecklenburg County Department of Environmental Health [illegible] indicated as acceptable for system installation [illegible]

This approval is granted based on the laws of the State of North Carolina and the rules and regulations of the North Carolina Department of Human Resources, Division of Health Services and the Mecklenburg County Health Commission which were in effect on the date of issuance and is void if at any time in the future, prior to completion of the system, these laws, rules and regulations are changed such that this approval would not have been granted had the new or revised laws, rules, and regulations been in effect on the issue date.

William R. Martin
Soil Scientist

Bill D. Hardesty Jr.
Environmental Health Director or Authorized Section Head

EHD-5-76

Environmental Health Department's Copy

Date Received 1-15-85

SIR No. 21821

T.C.Rec. 001-064-9-10115

Map Date

MECKLENBURG COUNTY
DEPARTMENT OF ENVIRONMENTAL HEALTH

APPLICATION FOR SOIL INVESTIGATION

1) NAME OF OWNER Knox (LAST) Russell (FIRST) B. (MIDDLE)

2) ADDRESS OF OWNER P.O. Box 4 Davidson NC ZIP 28036

3) PHONE NO. Home 892-0248 Office 892-0196

4) LOCATION OF PROPERTY North Rd. off Hwy 73 (STREET OR COUNTY ROAD)

5) SUBDIVISION Yachtman Shores LOT NO. 19 BLOCK NO.

MAP BOOK NO. PAGE NO.

6) DEED REFERENCE DEED BOOK PAGE NO

Application is hereby made to the Mecklenburg County Department of Environmental Health for the conduct of a soil investigation and an on site inspection of the lot hereinabove described for the purpose of determining if the lot is suitable for the installation of an individual septic tank wastewater treatment system with subsurface, soil absorption, effluent discharge

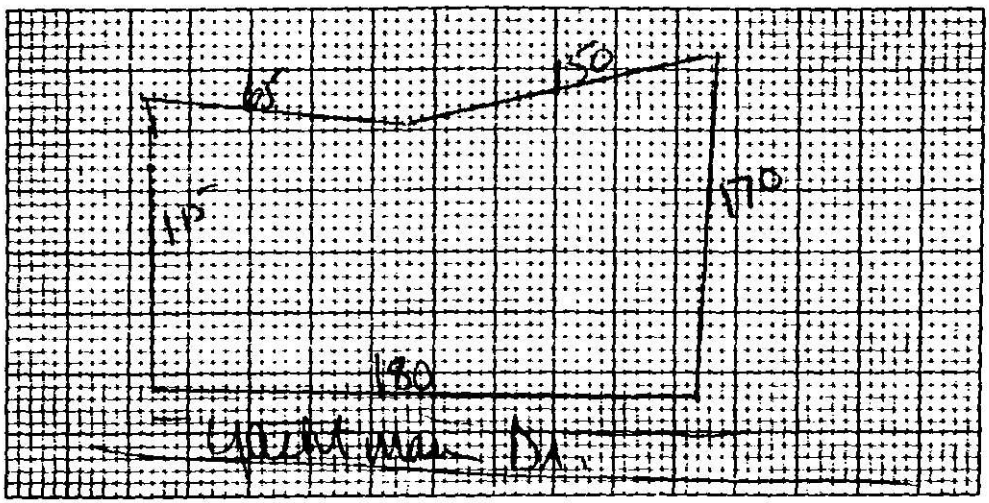

7) ACCURATELY DIAGRAM & DIMENSION LOT

Bobby B. Knox
OWNER

EHD-S-76

Environmental Health Department's Copy

DEPARTMENT OF
ENVIRONMENTAL HEALTH
MECKLENBURG COUNTY,
NORTH CAROLINA

SITE EVALUATION

S.I.R. NO. 21821

T.C. NO. [illegible]

(Ground Absorption Sewage Disposal)

OWNER: Russell & Bobby Kreef
ADDRESS: [illegible]
Davidson, N.C. 28036

PLAT NO: Lot 14
LOT SIZE: 21,500

LOCATION OF SITE: Yachtman Drive - off Nanty Road

FACTORS	AREA 1	AREA 2	AREA 3	AREA 4
1. SLOPE (%)	S PS 2-5-7 U	S PS — U	S PS — U	S PS U
2. SOIL TEXTURE (12-36 inches) Sandy, Loamy, Clayey (Note 2-1 Clay)	S PS clay U	S PS — U	S PS — U	S PS U
3. SOIL STRUCTURE (12-36 inches)	S PS Blocky U	S PS — U	S PS — U	S PS U
4. SOIL DEPTH (inches)	S PS 36-46" U	S PS — U	S PS — U	S PS U
5. RESTRICTIVE HORIZONS (Inches) (Impervious strata, Rock)	S PS >36" U	S PS old head U compacted	S PS — U	S PS U
6. SOIL DRAINAGE/GROUNDWATER (external and internal)	S PS [illegible] U groundwater	S channels PS surface U water	S surface PS water U runoff	S PS U
7. OTHER (Specify)	S PS See Note U limited	S PS U	S PS Areas U	S PS U
8. SOIL GROUP	Area UP	—	—	
9. SITE CLASSIFICATION	Provisionally suitable	unsuitable	unsuitable	
10. SOIL SERIES	[illegible]	Oldhead	surface water runoff	

S - Suitable PS - Provisionally Suitable U - Unsuitable

**See Diagram on Back (includes: soil areas, property lines, roads, streams, gullies, wet areas, fill areas, wells, water bodies, slopes)

Recommendations/Comments: Lagoon May require pump

Described by: William K. Martin
Title: Soil Scientist

Date: 2-14-85

DEPARTMENT OF
ENVIRONMENTAL
ECKLE BLDG.
NORTH CAROLI

