MECKLENBURG COUNTY
HEALTH DEPARTMENT

1155A #8225

11 MAY '16 PM 4:42

APPLICATION FOR APPROVAL TO USE AN EXISTING ON-SITE WASTEWATER TREATMENT & DISPOSAL SYSTEM / WATER SUPPLY WELL

APPLICATION TYPE: ○ SEPTIC ONLY ✓ WELL ONLY ○ SEPTIC & WELL
○ ADDITION OR RENOVATION WITH OCCUPANCY INCREASE ○ EXCHANGE MOBILE HOME (SAME # BEDROOMS)
✓ ADDITION OR RENOVATION WITH NO OCCUPANCY INCREASE ○ COMMERCIAL OR INDUSTRIAL

PERSON FILING APPLICATION:
NAME: Burt Ward's Homes of Distinction Inc
ADDRESS: 158 monarch Ln
CITY: mooresville
STATE: NC ZIP: 28115
PHONE: 704-999-5179
ALTERNATE PHONE:
E-MAIL: hod724@gmail.com

PROPERTY OWNER: ☐ SAME AS PERSON FILING APPLICATION
NAME: Gary Herrault
ADDRESS: 20101 Riverchase Dr
CITY: Cornelius
STATE: NC ZIP: 28031
PHONE: 704-728-9066
ALTERNATE PHONE:
E-MAIL: garykh@carolina.rr.com

JOB LOCATION INFORMATION
TAX PARCEL #: 00144164
STREET ADDRESS: 20101 Riverchase Dr
CITY: Cornelius
STATE: NC ZIP: 28031

SUBDIVISION OR MOBILE HOME PARK NAME:
Riverchase
LOT #: 17

WATER SUPPLY:
○ MUNICIPAL ✓ PRIVATE WELL ○ PUBLIC WELL ○ SHARED WELL ○ OTHER

RESIDENTIAL PROPERTY TYPE: ○ N/A
✓ HOUSE ○ MODULAR HOME ○ MULTIPLE FAMILY
○ SINGLE MOBILE HOME ○ DOUBLE WIDE
○ OTHER

OCCUPANCY (both fields are required):
NUMBER OF BEDROOMS: 3
NUMBER OF OCCUPANTS: 3

COMMERCIAL / INDUSTRIAL PROPERTY TYPE: ☐ N/A
TYPE OF BUSINESS:
EMPLOYEES PER SHIFT:
OF SHIFTS:
INDUSTRIAL WASTES? ○ YES ○ NO
UNDERGROUND STORAGE TANKS? ○ YES ○ NO

ADDITION/RENOVATION TYPE ATTACHED TO EXISTING STRUCTURE:
☐ BEDROOM ☐ BATHROOM ☐ KITCHEN ☐ DINING ROOM ☐ LIVING ROOM ☐ DEN
✓ GARAGE ☐ SUNROOM ☐ PORCH ☐ DECK ☐ OTHER

ADDITION/RENOVATION TYPE DETACHED FROM EXISTING STRUCTURE:
☐ DETACHED GARAGE ☐ DETACHED GARAGE WITH PLUMBING ☐ POOL HOUSE ☐ SHOP ☐ BARN
☐ STORAGE SHED ☐ DETACHED PORCH / DECK ☐ OTHER

*The undersigned, owner, or legal agent for the owner, of the property described above as the "Job Location" has read the foregoing application, acknowledges that the contents of same are true, and authorizes the Mecklenburg County Health Department to enter onto the property for the purpose of processing this request.

B Ward
Owner's/Agent's Signature

5/8/16
Date

A PROPOSED PLOT PLAN (see page 2) is required to be submitted with each application.

MECKLENBURG COUNTY – GROUNDWATER & WASTEWATER SERVICES
700 N. TRYON ST. SUITE 211 CHARLOTTE, NC 28202, OFFICE: 704-336-5103, FAX: 704-336-6894

Revised on: 01/03/11

File #: _____

PROPOSED PLOT PLAN

A drawing showing the locations of the following items is required: existing and proposed property lines with dimensions, easements or right-of-ways, proposed building pad(s) or existing building footprint(s), all appurtenances (garage, driveway, deck, pool, etc.), location of existing or proposed well(s), location of existing or proposed sewer lines and sewage disposal systems, surface water bodies, and any aboveground or underground storage tanks. Provide names for all roads that adjoin the property.

Street Address: 20101 Ravenchase Dr Tax Parcel #: 00144164

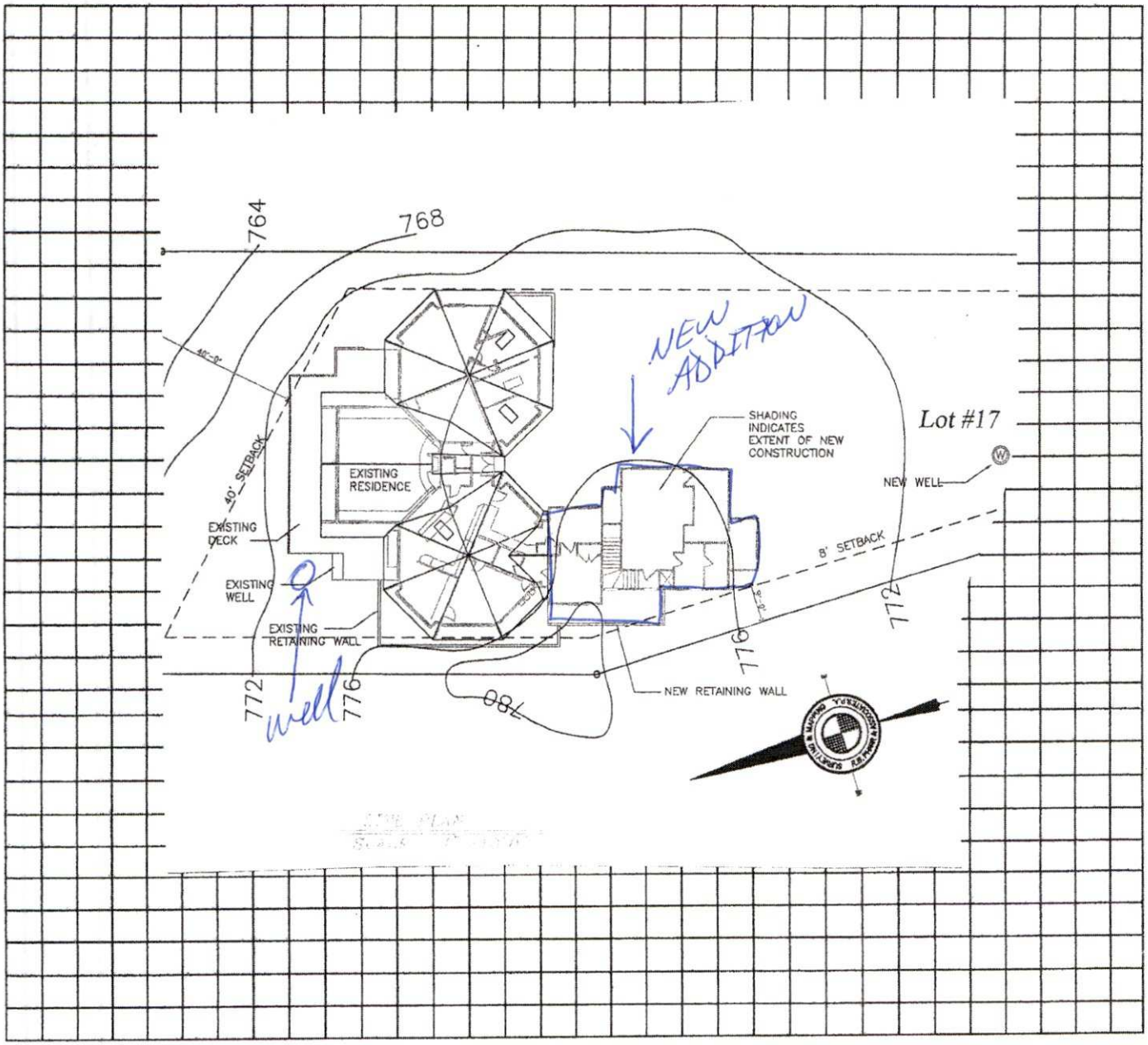

*The undersigned, an authorized agent of the Mecklenburg County Health Department, certifies that the Department has approved the Request for the "Job Location" contained in this document. This approval is granted in accordance with the provisions of Laws and Rules for Sanitary Sewage Collection, Treatment, and Disposal and Water Supply Wells in effect at the time of issuance of the permit and is subject to the following provisions:

- No work shall be conducted on the septic tank system until an installation, construction, alteration and/or repair approval is granted by this Department.
- This permit is not transferable.
- Addition/Renovation approval valid 1 year from issuance date
- Mobile home exchange approval valid 6 months from issuance date

OK TO USE TO BUILD A GARAGE. Existing well in back / GARAGE IN FRONT

REHS Signature _____ Date 5/13/16

REHS

MECKLENBURG COUNTY – GROUNDWATER & WASTEWATER SERVICES
700 N. TRYON ST. SUITE 211 CHARLOTTE, NC 28202, OFFICE: 704-336-5103, FAX: 704-336-6894

Revised on: 01/03/11

Payment Receipt

Mecklenburg County POS

Environmental Health
700 N. Tryon Street
Charlotte, NC 28202
Phone: 704-336-5100

Enter Account # or Customer Name Here: BURT WARD

Bill To:

BURT WARD
158 MONARCH LANE

Mooresville, NC 28115

Single Payment

Transaction Date:	05/12/2016 8:38 AM Pacific Time
Pay Method:	VISA **********3143
Approval #:	402467
Trace Number:	4fe8a0dd-a481-46bb-a475-edc565fef88e
Amount:	$100.00

Payment Amount:	$100.00
Total:	**$100.00**

Thank you for your payment.